MMY Historical Renovation Humboldt Mill + Annex

Architect
Julie Snow Architects

Contractor
Bor-Son Construction

Location
Minneapolis, MN

Awards
2004 AIA MN Honor Award and the 2004 Minneapolis Heritage Preservation Award

Gutted by fire, a former mill was preserved and adapted for new residences.

This project is an adaptive re-use and addition to the original Humboldt Mill. The former mill was gutted by fire and all that was left standing were the original limestone walls. The new structural system, which consisted of post-tensioned concrete flat slabs, was built within the remnant walls in a manner that braced and stabilized the original limestone but did not transfer gravity loads to the walls. Five new floor levels were built within the existing building and nine levels of new construction was added adjacent to the original mill.

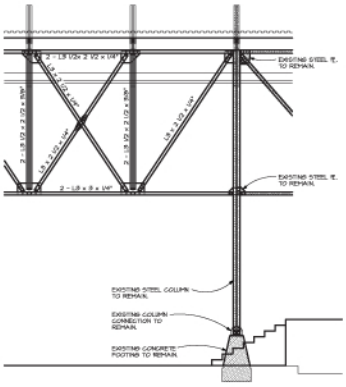

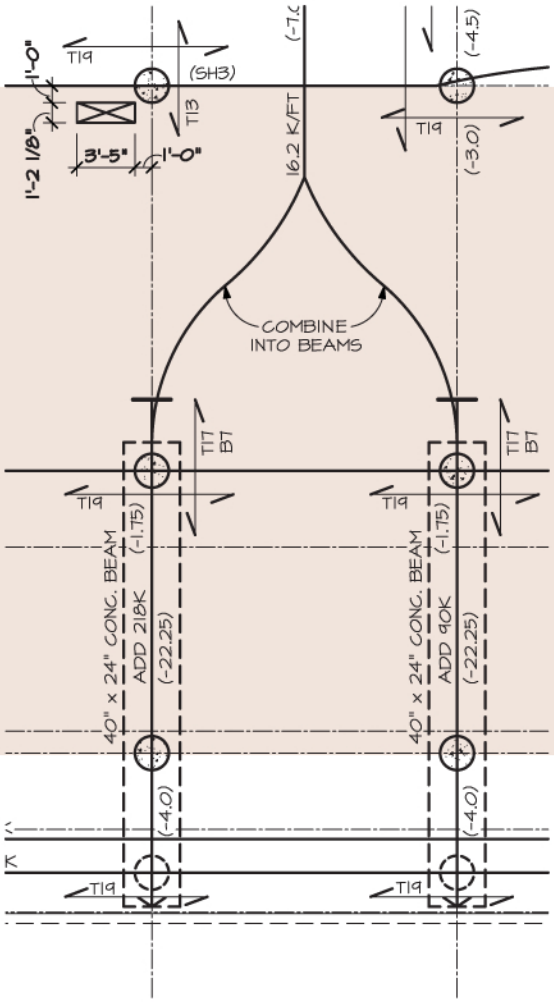

See the latest projects at
www.MattsonMacdonald.com

Mattson Macdonald Young structural engineers

MMY | Basset Creek Business Center | 901 North 3rd St, #100 | Minneapolis, MN 55401 | **612.827.7825**